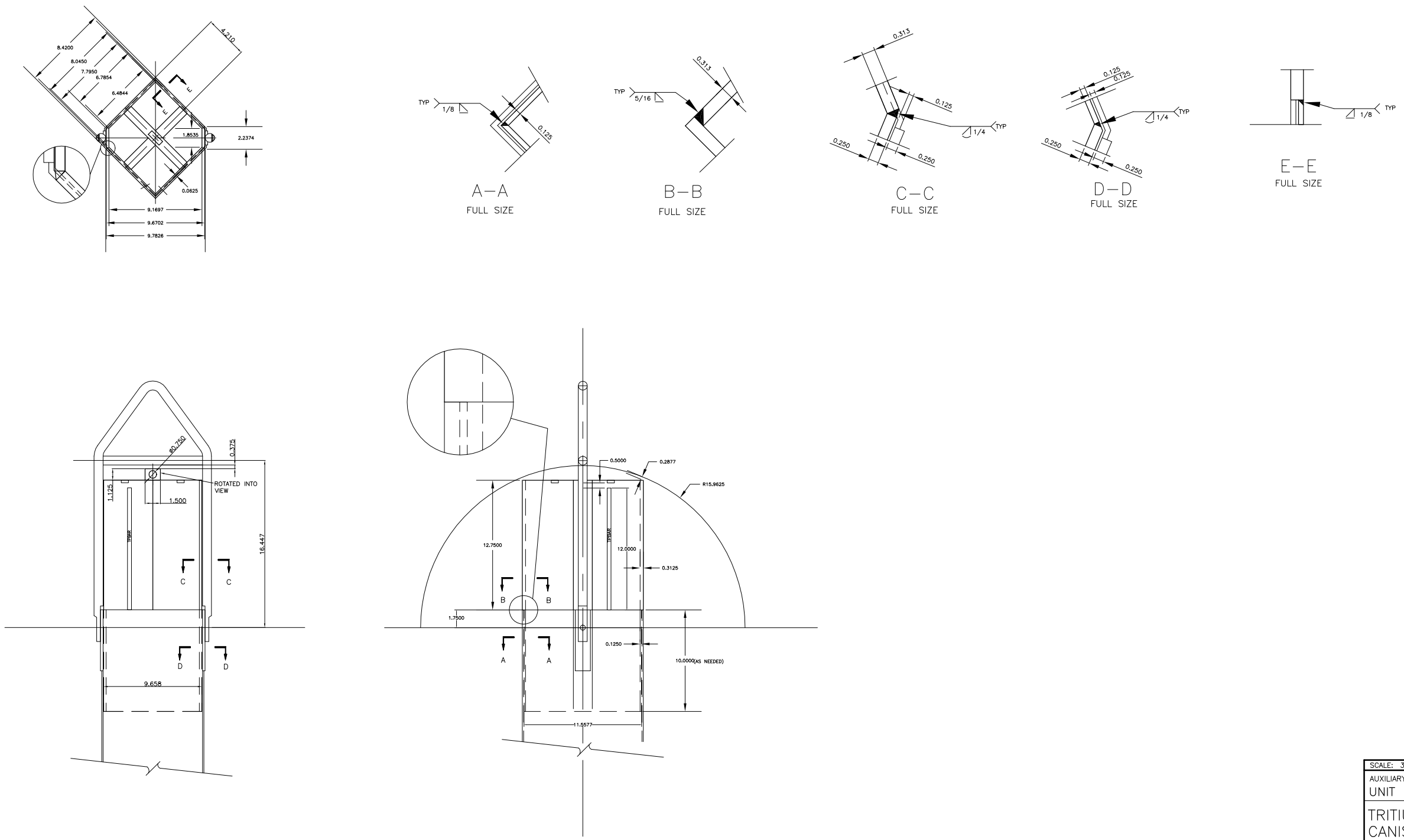


SCALE: 3" = 1'-0" EXCEPT AS NOTED

AUXILIARY BUILDING

UNIT 0

TRITIUM CONSOLIDATION FIXTURE
CANISTER TOP INSERT

WATTS BAR NUCLEAR PLANT
TENNESSEE VALLEY AUTHORITY

| INITIAL ISSUE | ENGINEERING APPROVAL |
|---|---|
| | 1 |
| | 2 |
| | 3 |

| CCD | DATE xx/xx/xx | 85 | M | 47W1242-2 | R A |
|---|---|---|---|---|---|

CAD MAINTAINED DRAWING